LINSY 林氏家居

安装示意图/Assembly Instruction

产品名称 Model NO.	沙发
产品型号 Product model	BS514-C2.F
产品组合 Product portfolio	①左三人+右三人 3seat(L) + 3seat(R)
尺寸规格 Specification	①(3600*1100*880)mm

成品部件明细 Product Parts Details

编号 NO.	名称 Name	规格 Specification	数量 QTY	材质 Material
1	左三人 3seat(L)	1800*1100*880	1	松木+胶合板+海绵+布料+金属 Solid wood + Plywood + Sponge + Cloth + Metal
2	右三人 3seat(R)	1800*1100*880	1	松木+胶合板+海绵+布料+金属 Solid wood + Plywood + Sponge + Cloth + Metal

制图 Draw C16

如何区分沙发的左右方向?
How to zone the left and right direction of the sofa?

(图示仅供分辨方向用/Picture are for orientation only)

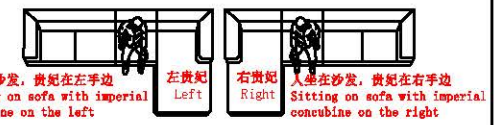

安装人数 Installer

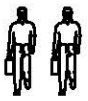



客户安装前须知:
Customers need to know before installation:
此安装图为"左三人+右三人"的位置关系。
This installation picture is "3seat(L) + 3seat(R)"

2-1

左 三 人 3seat(L)

STEP 1:

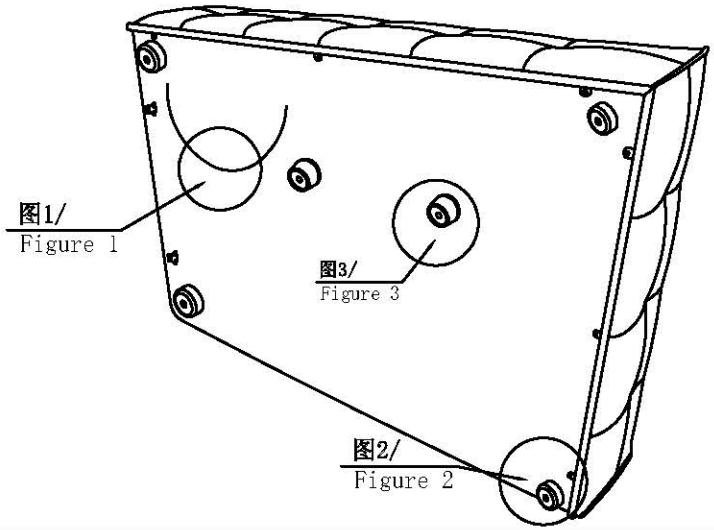

右 三 人 3seat(R)

STEP 1:

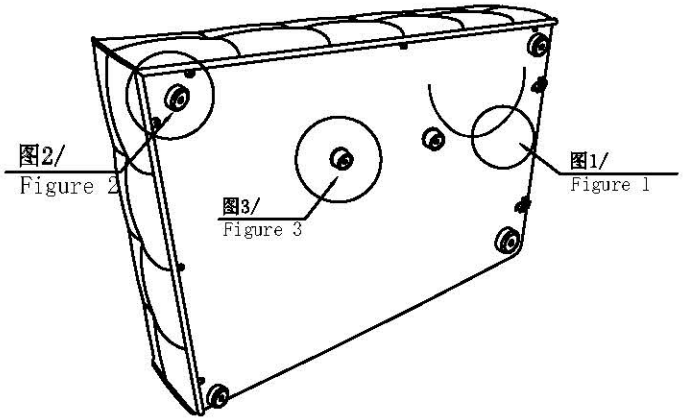

配件表 Accessories list

编号 NO.	名称 Name	图示 Icon	数量 QTY	左三人 3seat(L)	右三人 3seat(R)
A	说明书(含安装图) Mounting Instruction (with drawing)		1	1	0
B	(直径70mm*30mm)带木纹圆形塑料脚 (Diameter 70mm * 30mm) with wood grain circular plastic feet		8	4	4
C	M4*50自攻螺丝 M4*50 self tapping screw		12	6	6
D	脚-(直径47*28.4mm)不带钉黑胶脚 Feet -(Diameter 47*28.4mm) Vinyl feet without nails		4	2	2

提示：安装边脚前，请将胶脚拆掉
Please remove the rubber feet before installing the corner feet.

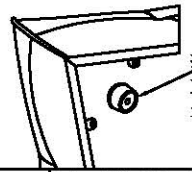

拆掉胶脚，再安装脚
Remove the rubber feet and reinstall them.

图3：中脚安装示意图
Figure 3: Middle foot installation diagram

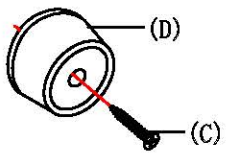

图2：边脚安装示意图2
Figure 2: Side foot installation diagram 2

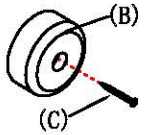

按打工画点安装
Install according to the palpable drawing point

图1：拉开拉链，取出配件包
Figure 1: Unzipper and take out the accessory bag

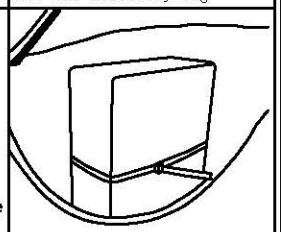

组 合 Combination

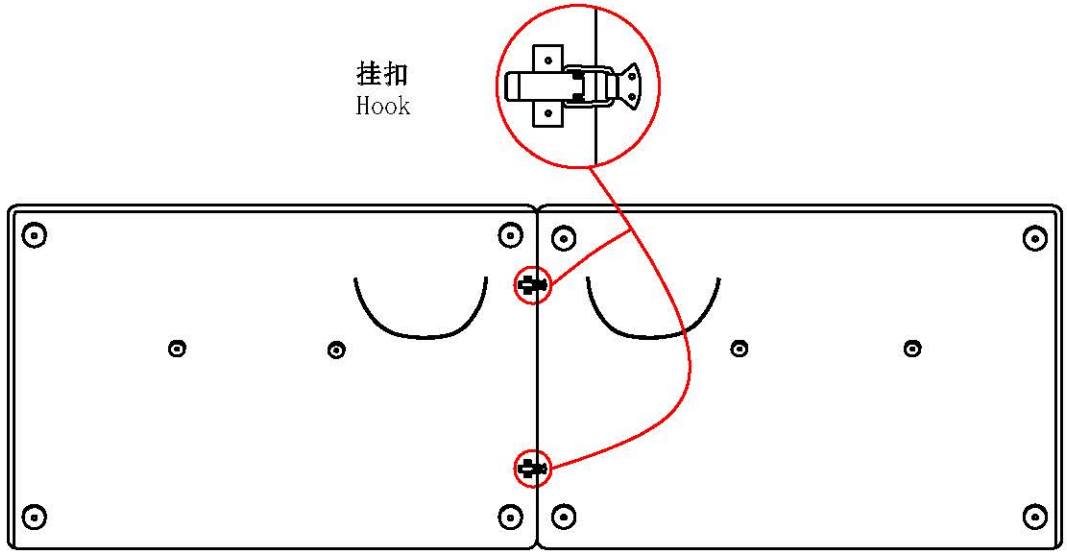

把左三人、右三人靠一起，锁上座架底的五金扣。
Put the 3seat(L) and the 3seat(R) together,
and lock the metal buckle at the bottom of the seat frame.

组 合 图 Combination

左三人+右三人 3seat(L) + 3seat(R)

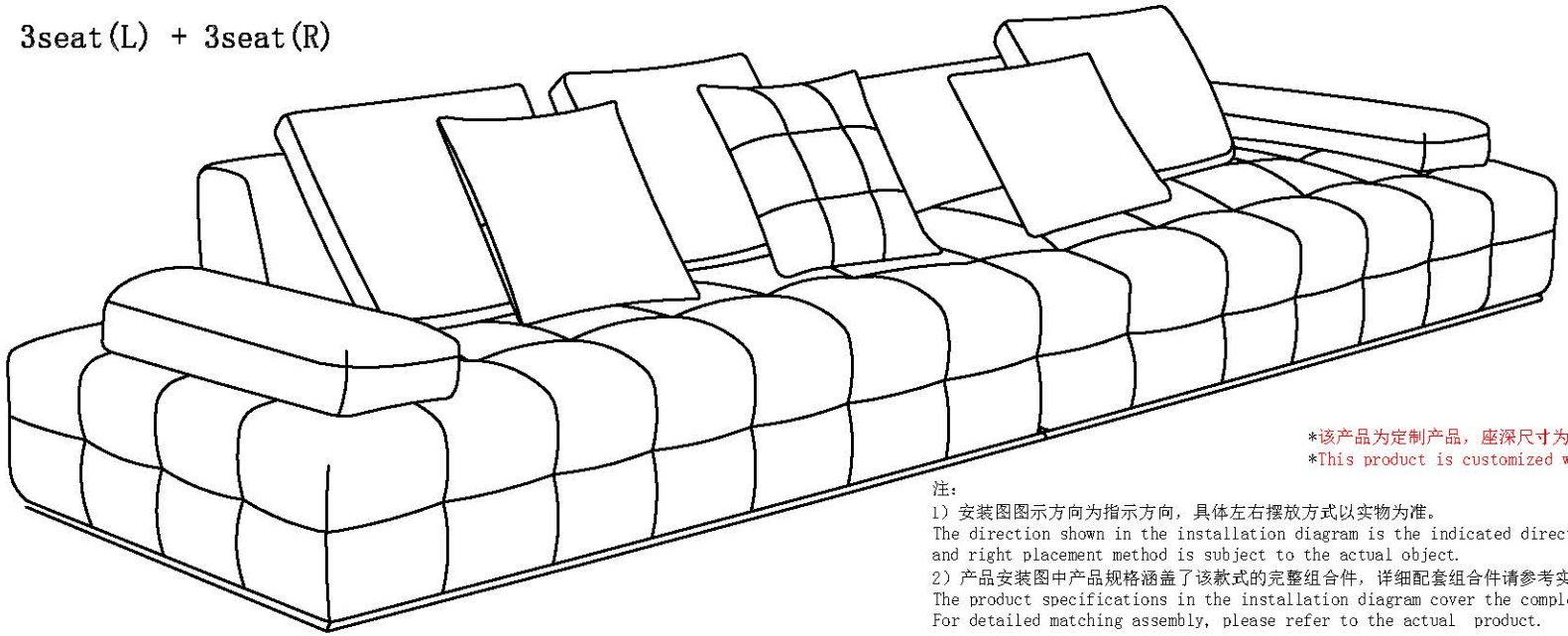

*该产品为定制产品，座深尺寸为60-70CM
*This product is customized with a seat depth of 60-70CM

注：
1）安装图图示方向为指示方向，具体左右摆放方式以实物为准。
The direction shown in the installation diagram is the indicated direction, and the specific left and right placement method is subject to the actual object.
2）产品安装图中产品规格涵盖了该款式的完整组合件，详细配套组合件请参考实物。
The product specifications in the installation diagram cover the complete assembly of this style. For detailed matching assembly, please refer to the actual product.

LINSY 林氏家居

安装示意图/Assembly Instruction

产品名称 Model NO.	沙发
产品型号 Product model	BS514-C2.F
产品组合 Product portfolio	①大左双人+大右双人 Big Loveseat(L) + Big Loveseat(R)
尺寸规格 Specification	①(3200*1100*880)mm

编号 NO.	名称 Name	规格 Specification	数量 QTY	材质 Material
1	大左双人 Big Loveseat(L)	1600*1100*880	1	松木+胶合板+海绵+布料+金属 Solid wood + Plywood + Sponge + Cloth + Metal
2	大右双人 Big Loveseat(R)	1600*1100*880	1	松木+胶合板+海绵+布料+金属 Solid wood + Plywood + Sponge + Cloth + Metal

成品部件明细 Product Parts Details

制图 Draw	C16

如何区分沙发的左右方向? How to zone the left and right direction of the sofa?

(图示仅供分辨方向用/Picture are for orientation only)

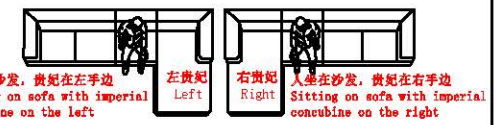

安装人数 Installer

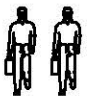



客户安装前须知：
Customers need to know before installation:
此安装图为“大左双人+大右双人”的位置关系。
This installation picture is "Big Loveseat(L) + Big Loveseat(R)"

2-1

大 左 双 人 Big Loveseat(L)

STEP 1:

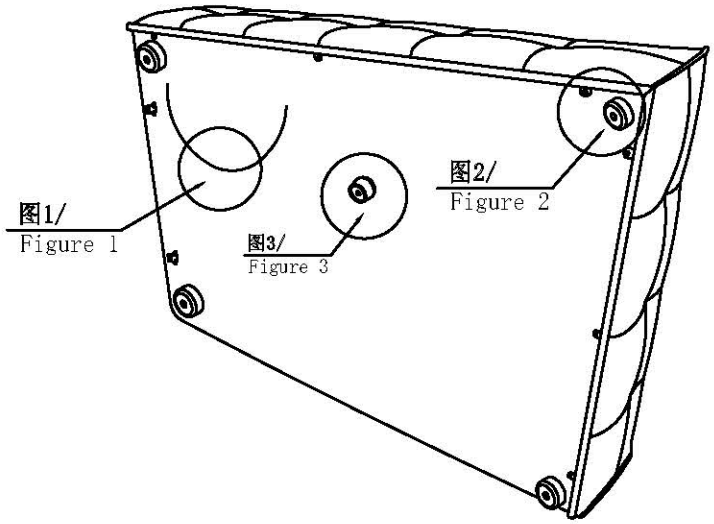

配件表 Accessories list

编号 NO.	名称 Name	图示 Icon	数量 QTY	大左双人 Big Loveseat(L)	大右双人 Big Loveseat(R)
A	说明书(含安装图) Mounting Instruction (with drawing)		1	1	0
B	(直径70mm*30mm)带木纹圆形塑料脚 (Diameter 70mm * 30mm) with wood grain circular plastic feet		8	4	4
C	M4*50自攻螺丝 M4*50 self tapping screw		10	5	5
D	脚-(直径47*28.4mm)不带钉黑胶脚 Feet -(Diameter 47*28.4mm) Vinyl feet without nails		2	1	1

大 右 双 人 Big Loveseat(R)

STEP 1:

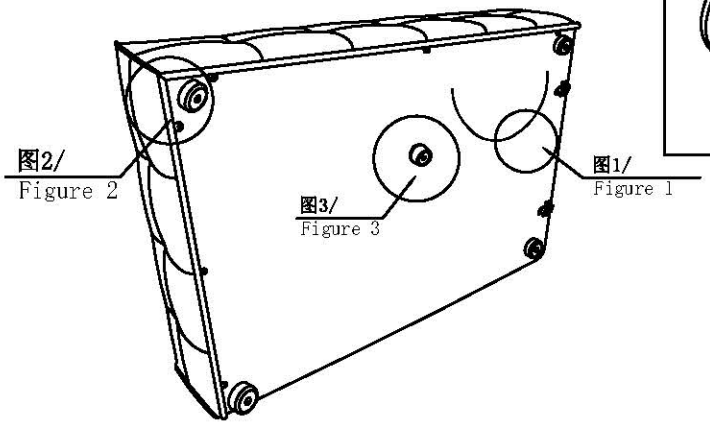

图3：中脚安装示意图
Figure 3: Middle foot installation diagram

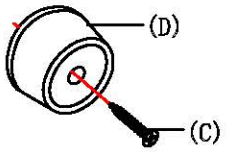

提示：安装边脚前，请将胶脚拆掉
Please remove the rubber feet before installing the corner feet.

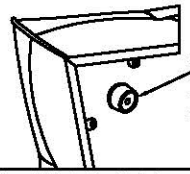

拆掉胶脚，再安装脚
Remove the rubber feet and reinstall them.

图2：边脚安装示意图2
Figure 2: Side foot installation diagram 2

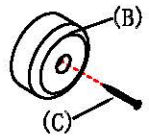

按打工画点安装
Install according to the palpable drawing point

图1：拉开拉链，取出配件包
Figure 1: Unzipper and take out the accessory bag

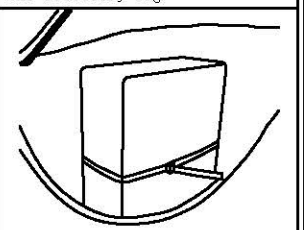

组 合 Combination

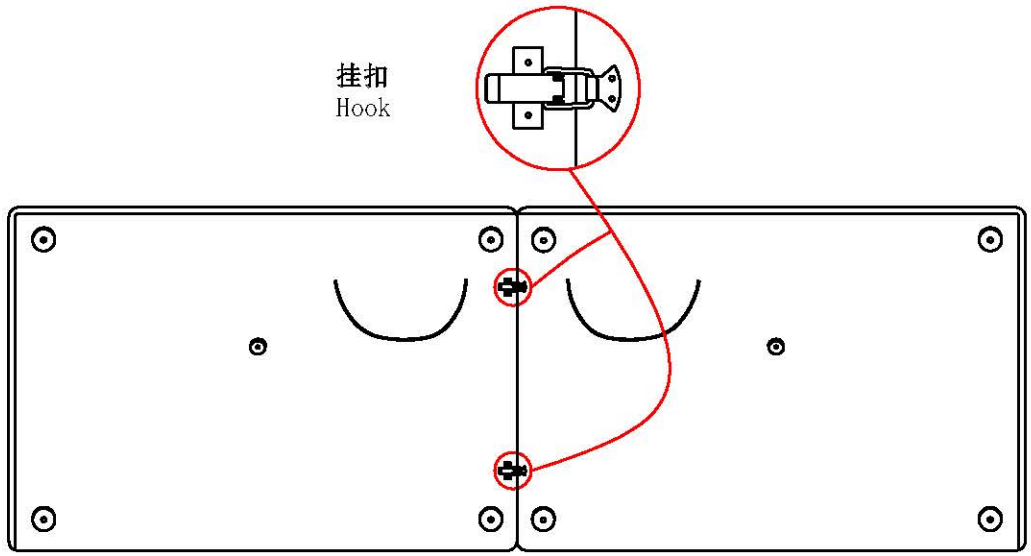

把大左双人、大右双人靠一起，锁上座架底的五金扣。
Put the Big Loveseat(L) and the Big Loveseat(R) together,
and lock the metal buckle at the bottom of the seat frame.

组 合 图 Combination

大左双人+大右双人 Big Loveseat(L) + Big Loveseat(R)

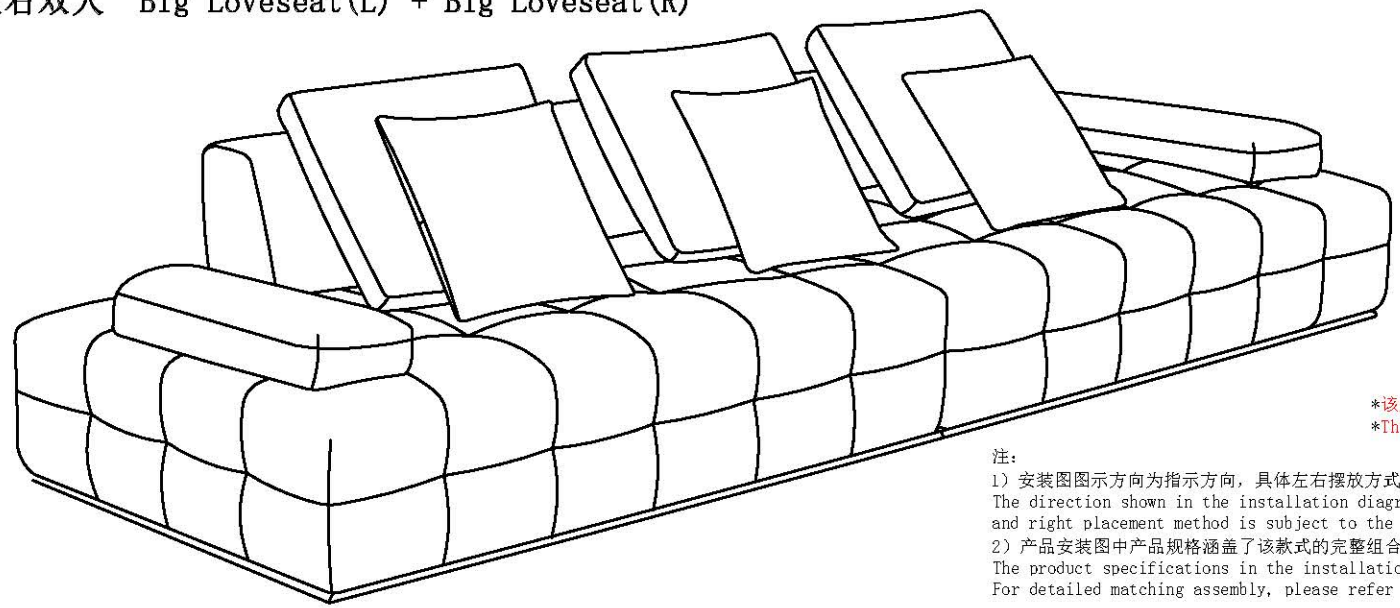

*该产品为定制产品，座深尺寸为60-70CM
*This product is customized with a seat depth of 60-70CM

注：
1）安装图图示方向为指示方向，具体左右摆放方式以实物为准。
The direction shown in the installation diagram is the indicated direction, and the specific left and right placement method is subject to the actual object.
2）产品安装图中产品规格涵盖了该款式的完整组合件，详细配套组合件请参考实物。
The product specifications in the installation diagram cover the complete assembly of this style. For detailed matching assembly, please refer to the actual product.

LINSY 林氏家居

安装示意图/Assembly Instruction

产品名称 Model NO.	沙发
产品型号 Product model	BS514-C2.F
产品组合 Product portfolio	①左双人+右双人 Loveseat(L) + Loveseat(R)
尺寸规格 Specification	①(2800*1100*880)mm

编号 NO.	名称 Name	规格 Specification	数量 QTY	材质 Material
1	左双人 Loveseat(L)	1400*1100*880	1	松木+胶合板+海绵+布料+金属 Solid wood + Plywood + Sponge + Cloth + Metal
2	右双人 Loveseat(R)	1400*1100*880	1	松木+胶合板+海绵+布料+金属 Solid wood + Plywood + Sponge + Cloth + Metal

成品部件明细 Product Parts Details

制图 Draw	C16

如何区分沙发的左右方向?
How to zone the left and right direction of the sofa?

(图示仅供分辨方向用/Picture are for orientation only)

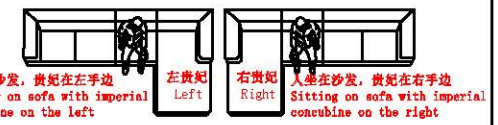

安装人数 Installer

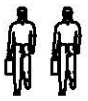



或者Or



客户安装前须知:
Customers need to know before installation:
此安装图为“左双人+右双人”的位置关系。
This installation picture is "Loveseat(L) + Loveseat(R)"

2-1

左 双 人 Loveseat(L)

STEP 1:

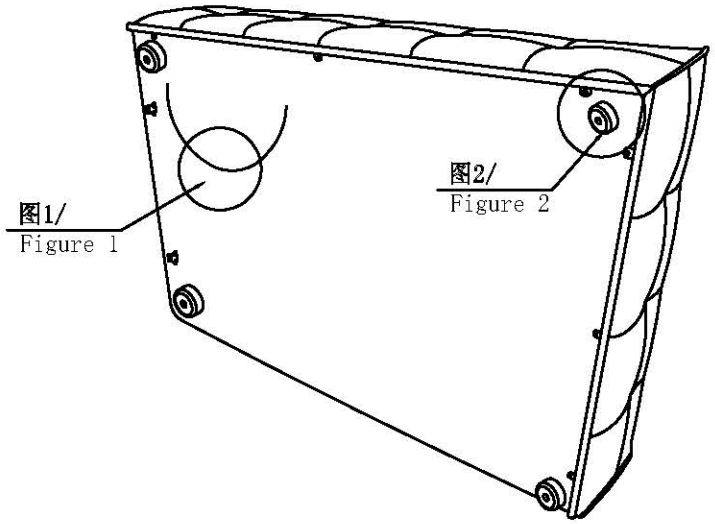

右 双 人 Loveseat(R)

STEP 1:

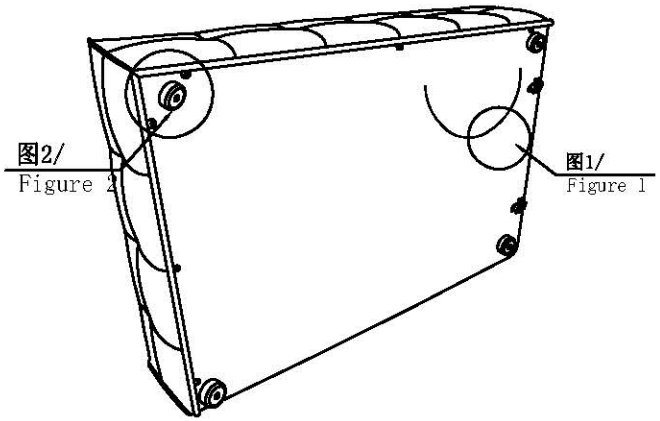

配件表 Accessories list

编号 NO.	名称 Name	图示 Icon	数量 QTY	左双人 Loveseat(L)	右双人 Loveseat(R)
A	说明书(含安装图) Mounting Instruction (with drawing)		1	1	0
B	(直径70mm*30mm)带木纹圆形塑料脚 (Diameter 70mm * 30mm) with wood grain circular plastic feet		8	4	4
C	M4*50自攻螺丝 M4*50 self tapping screw		8	4	4

提示：安装边脚前，请将胶脚拆掉
Please remove the rubber feet before installing the corner feet.

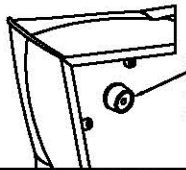

拆掉胶脚，再安装脚
Remove the rubber feet and reinstall them.

图2：边脚安装示意图2
Figure 2: Side foot installation diagram 2

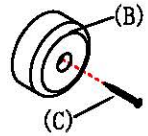

按打工画点安装
Install according to the palpable drawing point

图1：拉开拉链，取出配件包
Figure 1: Unzipper and take out the accessory bag

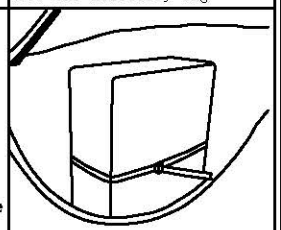

组 合 Combination

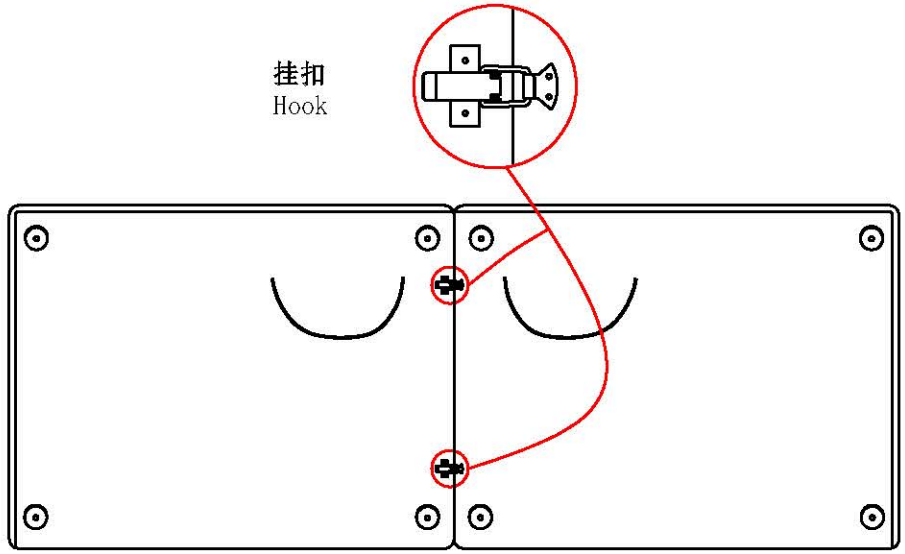

把左双人、右双人靠一起，锁上座架底的五金扣。
Put the Loveseat(L) and the Loveseat(R) together,
and lock the metal buckle at the bottom of the seat frame.

组 合 图 Combination

左双人+右双人 Loveseat(L) + Loveseat(R)

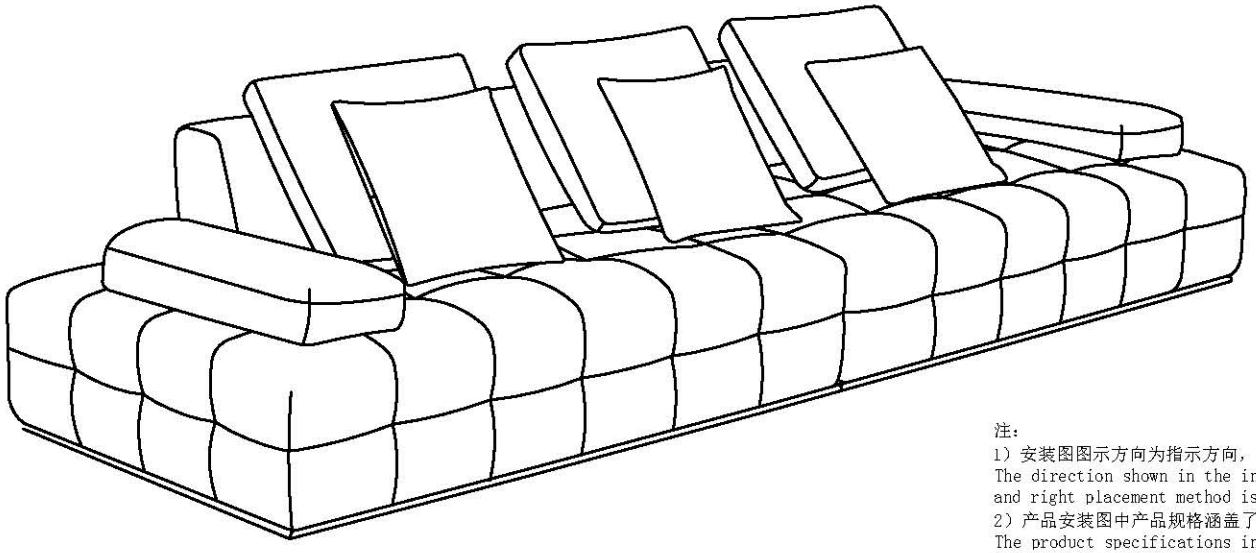

*该产品为定制产品，座深尺寸为60-70CM
*This product is customized with a seat depth of 60-70CM

注：
1）安装图图示方向为指示方向，具体左右摆放方式以实物为准。
The direction shown in the installation diagram is the indicated direction, and the specific left and right placement method is subject to the actual object.
2）产品安装图中产品规格涵盖了该款式的完整组合件，详细配套组合件请参考实物。
The product specifications in the installation diagram cover the complete assembly of this style. For detailed matching assembly, please refer to the actual product.